由 Autodesk 教育版产品制作

Drawing name:

Version: A /0

Front view

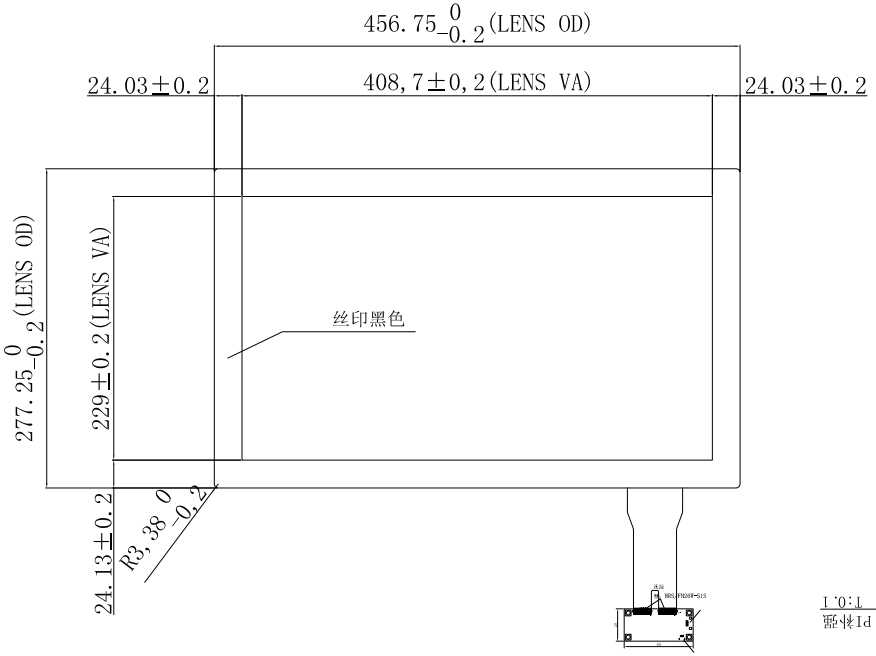

Side view

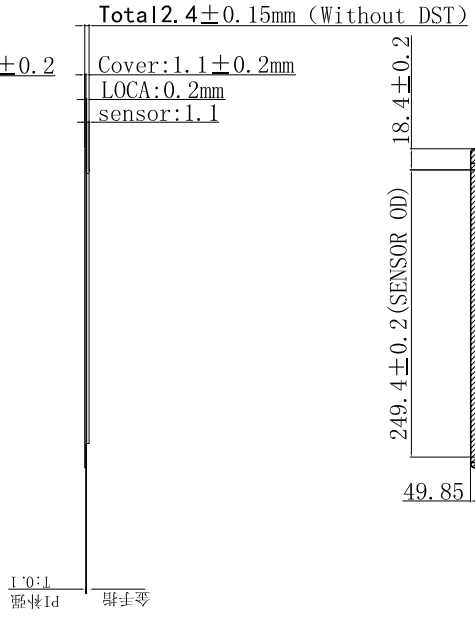

Back view

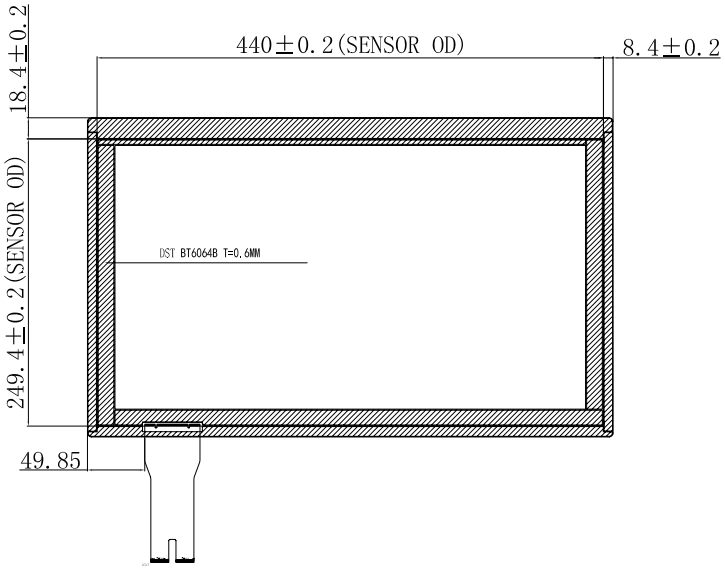

PCB

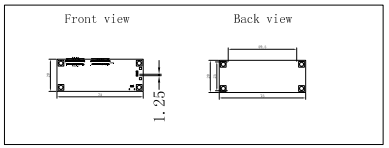

Technical parameters:

1. IC: ILI2510
Cover GLASS:3mm
LOCA:0.2mm
ITO SENSOR:0.7mm
Lead line:FPC (PINCH=0.6mm)
Total thickness: 2.4±0.15mm(Without DST)
2. USB Working voltage: 5V
3. Light transmittance: ≥82%
4. Surface hardness: 6H
5. Operating temperature: -20℃~+70℃, ≤90%RH
6. Storage temperature: -30℃~+80℃, ≤90%RH

Instructions:

1. Structure type: Glass+Glass.
2. Unmarked tolerance :±0.20;
3. Comply with ROHS standards;

USB Symbol

PIN	SYMBOL
1	VDD
2	D-
3	D+
4	GND

VER	Describe	Data
V00	New design	2019/5/21

Unmarked tolerance			
0.00~5.00	±0.1	>10	±0.20
5.00~10.00	±0.15	Angle	±0.5°

3RD ANGLE PROJN

深圳市万天源光电有限公司
WANTY Shenzhen Wanty Photoelectric Co.,Ltd

Customer ID	21.5'' CTP Assessment	RD	
Document number	WTY215599A01		
Data			
Proportion	1:1	Unit	mm

由 Autodesk 教育版产品制作