由 Autodesk 教育版产品制作

Drawing name:

Version: A /0

Front view

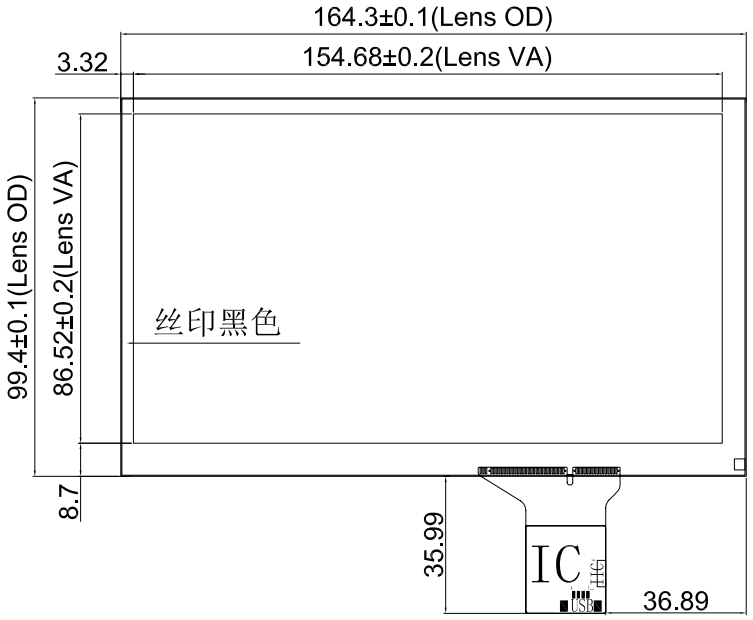


Side view

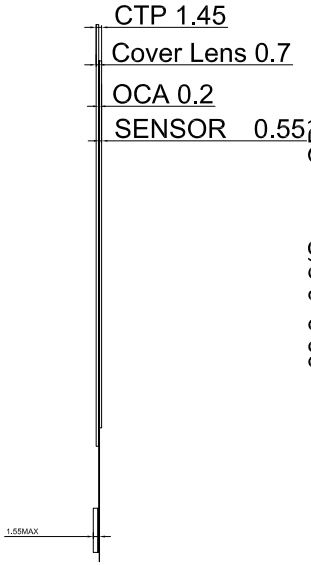


Back view

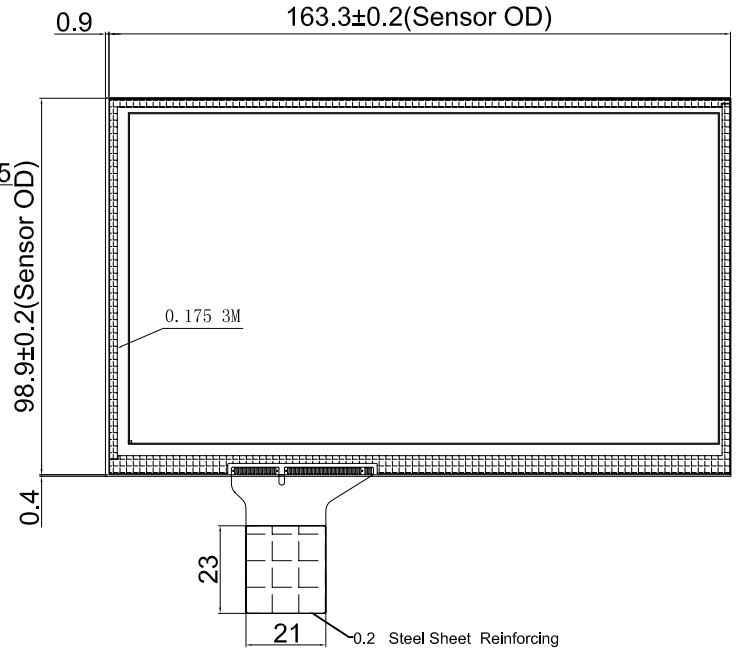


IIC

| Pin | SYMBOL |
|---|---|
| 1 | VCC |
| 2 | INT |
| 3 | RST |
| 4 | SCL |
| 5 | SDA |
| 6 | GND |

USB

| Pin | SYMBOL |
|---|---|
| 1 | GND |
| 2 | D+ |
| 3 | D− |
| 4 | VDD 5V |

**Technical parameters:**

1. IC:
Cover GLASS:0.7mm
OCA:0.2mm
ITO SENSOR:0.55mm
Lead line:FPC (PINCH=0.5mm)
Total thickness: 1.45±0.15mm
2. Working voltage: IIC 2.8V-3.3V USB 5V
3. Light transmittance: ≥82%
4. Surface hardness: 6H
5. Operating temperature: -20℃~+70℃, ≤90%RH
6. Storage temperature: -30℃~+80℃, ≤90%RH

Instructions:

1. Structure type: Glass+Glass.
2. Unmarked tolerance :±0.20;
3. Comply with ROHS standards;

| VER | Describe | Data |
|---|---|---|
| V00 | New design | 2017/2/6 |

| Unmarked tolerance | | | | |
|---|---|---|---|---|
| 0.00~5.00 | ±0.1 | >10 | ±0.20 | 3RD ANGLE PROJN |
| 5.00~10.00 | ±0.15 | Angle | ±0.5° | |

深圳市万天源光电有限公司
Shenzhen Wanty Photoelectric Co.,Ltd

| | | | |
|---|---|---|---|
| Customer ID | | RD | |
| Document number | WTY070144A11 | | |
| Data | 2017/2/6 | | |
| Proportion | 1:1 | Unit | mm |

由 Autodesk 教育版产品制作